IMAGINING the possibilities. MAKING THEM HAPPEN.

Indiana Department of Education

Glenda Ritz, NBCT
Indiana Superintendent of Public Instruction

ISTEP+: Grade 7

Mathematics

Released Part 1 Applied Skills (open-ended) Items

and Scoring Notes

Introduction

The *ISTEP+* Spring 2016 test was administered to Indiana students in Grades 3-8 and 10. The test included two parts: Part 1 was given in March, and Part 2 took place in late April and early May. Part 1 contained Applied Skills test questions (also referred to as open-ended items) that were hand scored by trained evaluators, and Part 2 was machine scored. Scores for Part 1 and Part 2 are combined to generate a student's total score.

Test results, as well as images of the Applied Skills student responses, are available online, and schools are expected to discuss results with parents and students. As a springboard for these conversations and to serve as a resource for teachers, the Indiana Department of Education has created this document, which consists of the following:

- a brief description of the types of questions on the test
- a short summary of scoring rules utilized by the trained evaluators
- a copy of the rubrics—or scoring guides—used by evaluators to score student responses
- a copy of the released Applied Skills questions *("released" means the items are posted on the web and are no longer secure; therefore, the released test items can be discussed and used with students as future practice items)*
- anchor papers—or sample student responses—used by evaluators to distinguish between score points

Notes:

- The Part 1 open-ended questions are released when test results are made available.
- It is important to keep in mind that the majority of a student's score is calculated from items in Part 2. Since Part 2 items are secure and are not released, they are not included in this document.

Question Types

This document addresses questions from *ISTEP+ Part 1. Students* demonstrate their knowledge and understanding by responding to items that are open-ended, providing written responses in a short-answer or essay-type format.

Part 1 consists of the following test question types: Constructed-Response (CR), Extended-Response (ER), and a Writing Prompt (WP). Item types vary by subject area. Math, Science, and Social Studies include CR and ER items. English/Language Arts includes CR and WP test questions.

Scoring

The questions on *ISTEP+* Part 1 are scored by evaluators who must have a four-year college degree and pass a series of qualifying tests. Prior to scoring student responses, evaluators receive extensive training to ensure that student responses are scored accurately and consistently.

For Part 1 of *ISTEP+*, each question is scored according to a rubric, or scoring guide. Rubrics clearly define the requirements for each score point. A set of student responses representing all of the score points on a rubric are selected as samples—called anchor papers—and are used as clear examples of specific score points. Anchor papers are presented within this document.

ISTEP+ Part 1: Mathematics		
Question Type	**Score Reporting Categories**	**Scoring Method**
Constructed-Response (CR)	Computation Algebra and Functions Geometry and Measurement Mathematical Process	2-pt. CR Content Rubric (Grades 3-8, 10) 2-pt. CR Process Rubric (Grades 3-8, 10)
Extended-Response (ER)	Computation Algebra and Functions Geometry and Measurement Mathematical Process	3-pt. CR Content Rubric (Grades 3-8, 10) 3-pt. CR Process Rubric (Grades 3-8, 10)

If a student's response is unable to be scored, it is assigned one of the following condition codes:

- **A** Blank/No Response/Refusal
- **B** Illegible
- **C** Written predominantly in a language other than English
- **D** Insufficient response/Copied from text
- **E** Response not related to test questions or scoring rule (not applied to Mathematics questions)

More information is available regarding assessment topics on the Office of Student Assessment homepage at http://www.doe.in.gov/assessment.

Constructed-Response Rubric

Content Rubric	
2	A score of two indicates a **thorough understanding** of the mathematical concepts embodied in the task. The response • shows algorithms, computations, and other content related work executed correctly and completely.
1	A score of one indicates a **partial understanding** of the mathematical concepts embodied in the task. The response • contains errors in the execution of algorithms, computations, and/or other content related work.
0	A score of zero indicates **limited or no understanding** of the mathematical concepts embodied in the task.
Process Rubric	
2	A score of two indicates a **thorough understanding** of the problem-solving concepts embodied in the task. The response • shows an appropriate strategy to solve the problem, and the strategy is executed correctly and completely. • identifies all important elements of the problem and shows a complete understanding of the relationships among them. • provides clear and complete explanations and/or interpretations when required.
1	A score of one indicates a **partial understanding** of the problem-solving concepts embodied in the task. The response contains one or more of the following errors. The response • shows an appropriate strategy to solve the problem. However, the execution of the strategy contains errors and/or is incomplete. • identifies some of the important elements of the problem and shows a general understanding of the relationships among them. • provides incomplete, partial, or unclear explanations and/or interpretations when required.
0	A score of zero indicates **limited or no understanding** of the problem-solving concepts embodied in the task.

<u>Clarification and Implementation Guidance</u>

- Correct answers ONLY, on all parts of the problem with no work shown, will receive a maximum of 1 point in content and a maximum of 1 point in Process.
- A student can receive the top score point in Process if the strategy used would result in a correct answer even though the response contains computational errors.
- A student can receive the top score point in Process if an error made in the “content” portion is used with an appropriate strategy to solve the problem.

Extended-Response Rubric

	Content Rubric
3	A score of three indicates a **thorough understanding** of the mathematical concepts embodied in the task. The response • shows algorithms, computations, and other content related work executed correctly and completely.
2	A score of two indicates a **partial understanding** of the mathematical concepts embodied in the task. The response • shows an attempt to execute algorithms, computations, and other content related work correctly and completely; computation errors or other minor errors in the content related work may be present.
1	A score of one indicates a **limited understanding** of the mathematical concepts embodied in the task. The response • contains major errors, or only a partial process. • contains algorithms, computations, and other content related work which may only be partially correct.
0	A score of zero indicates **no understanding** of the mathematical concepts embodied in the task.
	Process Rubric
3	A score of three indicates a **thorough understanding** of the problem-solving concepts embodied in the task. The response • shows an appropriate strategy to solve the problem, and the strategy is executed correctly and completely. • identifies all important elements of the problem and shows a complete understanding of the relationships among them. • provides clear and complete explanations and/or interpretations when required.
2	A score of two indicates a **partial understanding** of the problem-solving concepts embodied in the task. The response contains one or more of the following errors. The response • shows an appropriate strategy to solve the problem. However, the execution of the strategy lacks an essential element. • identifies some of the important elements of the problem and shows a general understanding of the relationships among them. • provides incomplete or unclear explanations and/or interpretations when required.
1	A score of one indicates a **limited understanding** of the problem-solving concepts embodied in the task. The response contains one or more of the following errors. The response • shows an appropriate strategy to solve the problem. However, the execution of the strategy is applied incorrectly and/or is incomplete. • shows a limited understanding of the relationships among the elements of the problem. • provides incomplete, unclear, or omitted explanations and/or interpretations when required.
0	A score of zero indicates **no understanding** of the problem-solving concepts embodied in the task.

Clarification and Implementation Guidance

- Correct answers ONLY, on all parts of the problem with no work shown, will receive a maximum of 2 points in content and a maximum of 2 points in Process.
- A student can receive the top score point in Process if the strategy used would result in a correct answer even though the response contains computational errors.
- A student can receive the top score point in Process if an error made in the “content” portion is used with an appropriate strategy to solve the problem.

Item #1

Constructed-Response

Constructed-Response
Standard 3: Algebra and Functions
Standard 6: Mathematical Process

Question 1

1. An office pays a company to collect recyclable paper each week. The recycling company charges a $20.00 collection fee and $0.30 for each kilogram of paper it collects.

Last week, the office had to pay the recycling company $59.60.

Part A

Write an equation that can be used to determine the number of kilograms of paper the recycling company collected from the office last week. Be sure to define the variable in your equation.

Define the variable _____

_____

Equation _____

Part B

This week, the office projects that they will have 20% more recyclable paper than last week.

Based on this projection, how many kilograms of recyclable paper will the office have this week?

Show All Work

Answer _____ kilograms

Exemplary Response:

- n = number of kilograms of paper

AND

- 59.6 = 20 + (0.30)(n)

AND

- Sample Process:

59.6 = 20 + (0.30)(n)
39.6 = (0.30)(n)
39.6/(0.3) = n
n = 132 pounds

100% + 20% = 120%
120% = 1.2
1.2 x 132 = 158.4 pounds

OR

- Other valid process

Question 1, Sample A – Algebra and Functions Score Point 2; Process Score Point 2

An office pays a company to collect recyclable paper each week. The recycling company charges a $20.00 collection fee and $0.30 for each kilogram of paper it collects.

Last week, the office had to pay the recycling company $59.60.

Part A

Write an equation that can be used to determine the number of kilograms of paper the recycling company collected from the office last week. Be sure to define the variable in your equation.

Define the variable K - Kilograms of paper

Equation $20 + .30K = 59.60$

Part B

This week, the office projects that they will have 20% more recyclable paper than last week.

Based on this projection, how many kilograms of recyclable paper will the office have this week?

Show All Work

$$\begin{array}{r} 59.60 \\ -\ 20.00 \\ \hline 39.6 \end{array}$$

$39.6 \div .30 = 132$

$132 \times .20 = 26.4$

Answer 158.4 kilograms

$$\begin{array}{r} 132.0 \\ +\ 26.4 \\ \hline 158.4 \end{array}$$

Scoring Notes: The response demonstrates a thorough understanding of algebra and functions with both a good variable definition and valid equation in Part A. The response also demonstrates a thorough understanding of the mathematical process with a valid setup and a correct solution for the number of kilograms of recyclable paper n Part B. This response receives two points for content and two points for process.

Question 1, Sample B – Algebra and Functions Score Point 2; Process Score Point 1

An office pays a company to collect recyclable paper each week. The recycling company charges a $20.00 collection fee and $0.30 for each kilogram of paper it collects.

Last week, the office had to pay the recycling company $59.60.

Part A

Write an equation that can be used to determine the number of kilograms of paper the recycling company collected from the office last week. Be sure to define the variable in your equation.

Define the variable Kilograms of paper = P

Equation 59.60 = 20 + (P × .30)

Part B

This week, the office projects that they will have 20% more recyclable paper than last week.

Based on this projection, how many kilograms of recyclable paper will the office have this week?

Show All Work

59.60 − 20 = 39.6 ÷ .30 = 132 Kilograms of paper

132 × .20 = 26.4

Answer 26.4 kilograms

Scoring Notes: The response demonstrates a thorough understanding of algebra and functions with both a good variable definition and a valid equation in Part A. The response demonstrates a limited understanding of the mathematical process in Part B as only the increase in the kilograms of recyclable paper is found. This increase is not added to the original amount of recyclable paper which is correctly determined in the first portion of Part B. This response receives two points for content and one point for process.

Question 1, Sample C – Algebra and Functions Score Point 1; Process Score Point 1

An office pays a company to collect recyclable paper each week. The recycling company charges a $20.00 collection fee and $0.30 for each kilogram of paper it collects.

Last week, the office had to pay the recycling company $59.60.

Part A

Write an equation that can be used to determine the number of kilograms of paper the recycling company collected from the office last week. Be sure to define the variable in your equation.

Define the variable x represents how many number of kilograms of paper collected.

Equation $(59.60 - 20.00) \div 0.30 = x$

Part B

This week, the office projects that they will have 20% more recyclable paper than last week.

Based on this projection, how many kilograms of recyclable paper will the office have this week?

Show All Work

$$\begin{array}{r} 59.60 \\ \times\ .2 \\ \hline 119.20 \end{array} \qquad \begin{array}{r} 119.20 \\ -\ 20.00 \\ \hline 99.20 \end{array}$$

$$30\overline{)99.2000} = 3306$$

Answer 33.06 kilograms

Scoring Notes: The response demonstrates a partial understanding of algebra and functions by providing a correct equation in Part A but does not solve for the correct number of kilograms of recyclable paper prior to the increase in Part B. The response also demonstrates a partial understanding of the mathematical process as the variable definition is valid in part A, but the correct number of kilograms of recyclable paper after the increase is not determined. This response receives one point for content and one point for process.

Question 1, Sample D – Algebra and Functions Score Point 1; Process Score Point 0

An office pays a company to collect recyclable paper each week. The recycling company charges a $20.00 collection fee and $0.30 for each kilogram of paper it collects.

Last week, the office had to pay the recycling company $59.60.

Part A

Write an equation that can be used to determine the number of kilograms of paper the recycling company collected from the office last week. Be sure to define the variable in your equation.

Define the variable $59.60 - $20.00 = X ÷ $0.30 = K

Equation $59.60 - $20.00 = $39.60 ÷ $0.30 = 132 Kilograms

Part B

This week, the office projects that they will have 20% more recyclable paper than last week.

Based on this projection, how many kilograms of recyclable paper will the office have this week?

Show All Work

132
x .20
0.00
2640

Answer 26.40 kilograms

Scoring Notes: The response demonstrates a partial understanding of algebra and functions by providing an incorrect equation in Part A, but a correct solution for the amount of recyclable paper prior to the increase in the equation portion of Part A. The response demonstrates little to no understanding of the mathematical process as the variable definition is invalid in part A. The response demonstrates a limited understanding of the mathematical process in Part B as only the increase in the kilograms of recyclable paper is found. This increase is not added to the original amount of recyclable paper, which is correctly determined in the first portion of Part B. This response receives one point for content and zero points for process.

Question 1, Sample E – Algebra and Functions Score Point 0; Process Score Point 1

An office pays a company to collect recyclable paper each week. The recycling company charges a $20.00 collection fee and $0.30 for each kilogram of paper it collects.

Last week, the office had to pay the recycling company $59.60.

Part A

Write an equation that can be used to determine the number of kilograms of paper the recycling company collected from the office last week. Be sure to define the variable in your equation.

Define the variable K= the number of kilograms of paper

Equation 20+.30K =

Part B

This week, the office projects that they will have 20% more recyclable paper than last week.

Based on this projection, how many kilograms of recyclable paper will the office have this week?

Show All Work

$$\begin{array}{r} 59.60 = 60 \\ +20 \\ \hline 80 \end{array}$$

Answer 80 kilograms

Scoring Notes: The response demonstrates a partial understanding of algebra and functions by providing a correct variable definition in Part A. The response demonstrates little to no understanding of the mathematical process as the equation in Part A is incorrect and the mathematical process for determining the number of kilograms of recyclable paper in Part B is invalid. This response receives zero points for content and one point for process.

Question 1, Sample F – Algebra and Functions Score Point 0; Process Score Point 0

An office pays a company to collect recyclable paper each week. The recycling company charges a $20.00 collection fee and $0.30 for each kilogram of paper it collects.

Last week, the office had to pay the recycling company $59.60.

Part A

Write an equation that can be used to determine the number of kilograms of paper the recycling company collected from the office last week. Be sure to define the variable in your equation.

Define the variable K=Each kilogram and W=week

Equation 20 + .30k=w

Part B

This week, the office projects that they will have 20% more recyclable paper than last week.

Based on this projection, how many kilograms of recyclable paper will the office have this week?

Show All Work

198.8
30)59.60
-30
-246
270
260
240

Answer 198.8 kilograms

Scoring Notes: The response demonstrates little to no understanding of algebra and functions by providing an incorrect variable definition in Part A. The response demonstrates little to no understanding of the mathematical process as the equation in Part A is incorrect and the mathematical process for determining the number of kilograms of recyclable paper in Part B is invalid. This response receives zero points for content and zero points for process.

Item #2

Constructed-Response

Constructed-Response
Standard 4: Geometry and Measurement
Standard 6: Mathematical Process

Question 2

2. The figure shows the dimensions of a piece of foam Rylie would like to use as a pillow. Rylie wants to cover the piece of foam with fabric.

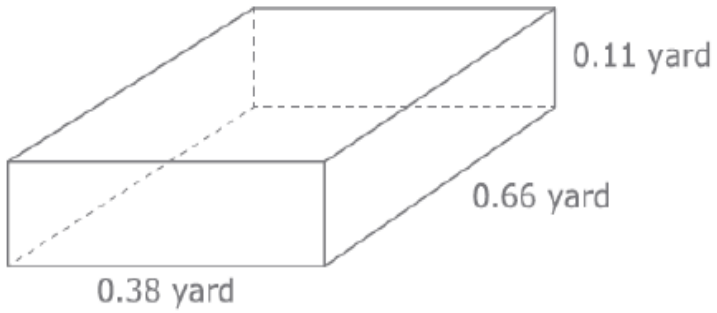

Piece of Foam

Part A

Sketch the net of the piece of foam and label the measurements of the length, width, and height.

Net of Piece of Foam

Part B

What is the least amount of fabric, in square yards, needed to cover the entire piece of foam? Do NOT round your answer.

Show All Work

Answer _____ square yards

Exemplary Response:

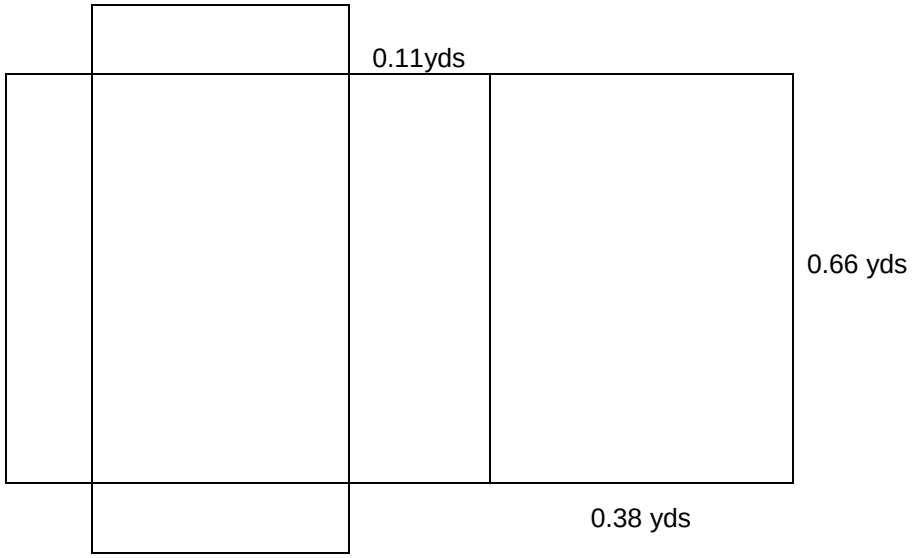

- Sample Process

  length = 0.66 yards
  width = 0.38 yards
  height = 0.11 yards

  Surface area of a rectangular prism =
  2 * length * width + 2 * length * height + 2 * width * height

  Surface area = 2(0.66)(0.38) + 2(0.66)(0.11) + 2(0.38)(0.11)
  Surface area = 0.5016 + 0.1452 + 0.0836

  Surface area = 0.7304 square yards

OR

- Other valid process

Question 2, Sample A – Geometry and Measurement Score Point 2; Process Score Point 2

The figure shows the dimensions of a piece of foam Rylie would like to use as a pillow. Rylie wants to cover the piece of foam with fabric.

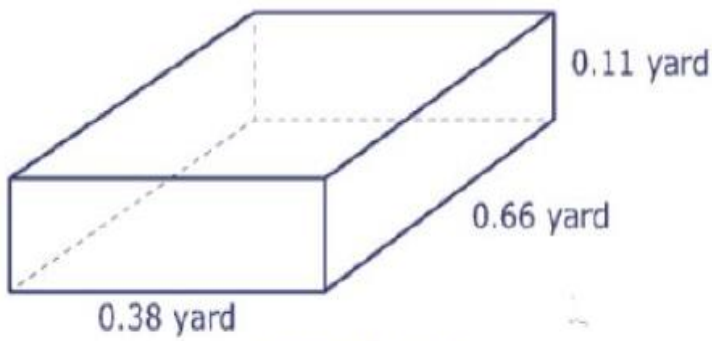

Piece of Foam

Part A

Sketch the net of the piece of foam and label the measurements of the length, width, and height.

Net of Piece of Foam

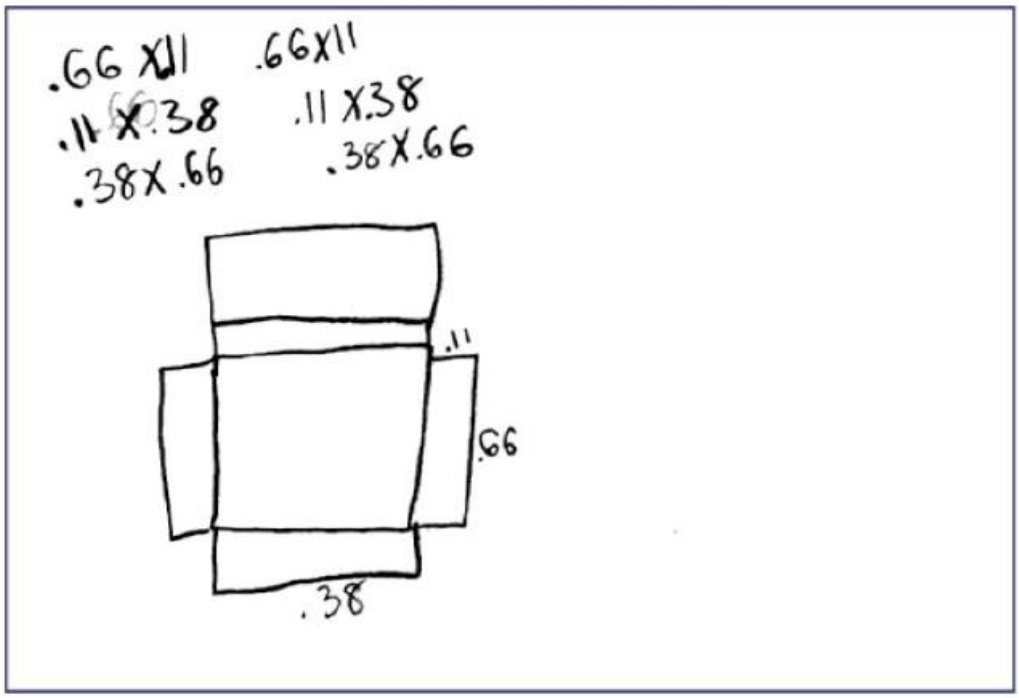

Part B

What is the least amount of fabric, in square yards, needed to cover the entire piece of foam? Do NOT round your answer.

Show All Work

.66 X .11 (2) = .1452
.11 X .38 (2) = .0836
.38 X .66 (2) = .5016
.7304

Answer 0.7304 square yards

Scoring Notes: The response indicates a thorough understanding of geometry and measurement by forming a correct net (six sections) of a rectangular prism in Part A along with a correct setup for surface area in Part B. The response demonstrates a thorough understanding of the mathematical process with correct labeling of the net in Part A and a correct calculation of the surface area of a rectangular prism in Part B. This response receives two points for content and two points for process.

Question 2, Sample B – Geometry and Measurement Score Point 2; Process Score Point 1

The figure shows the dimensions of a piece of foam Rylie would like to use as a pillow. Rylie wants to cover the piece of foam with fabric.

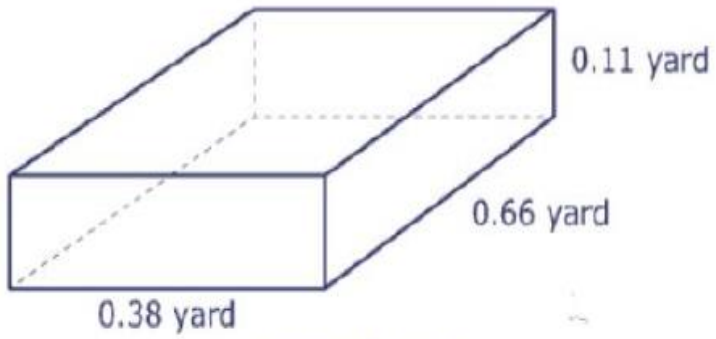

Piece of Foam

Part A

Sketch the net of the piece of foam and label the measurements of the length, width, and height.

Net of Piece of Foam

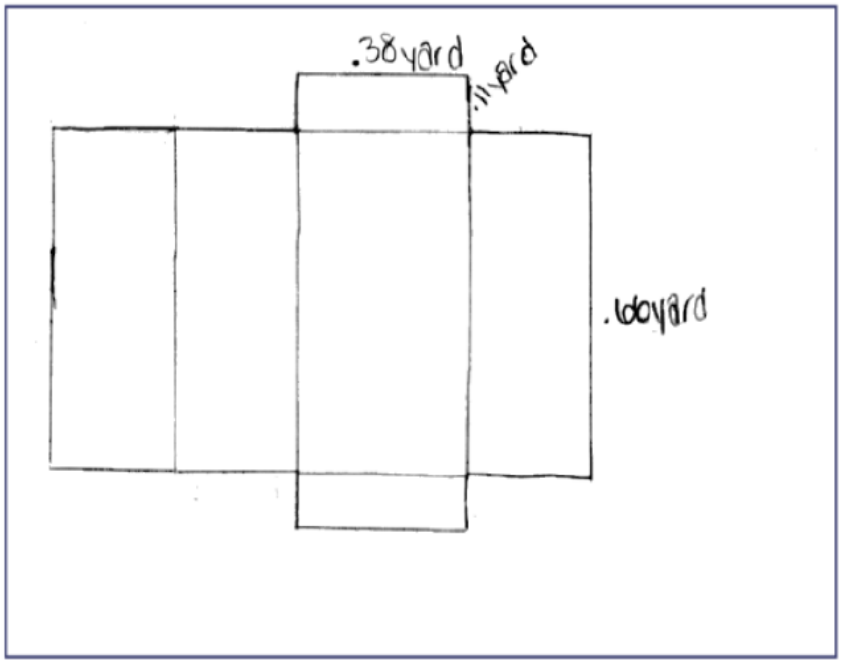

Part B

What is the least amount of fabric, in square yards, needed to cover the entire piece of foam? Do NOT round your answer.

Show All Work

2wh: .11 x .38 x 2 = .036
2lh: .66 x .11 x 2 = .1452
+ 2lw: .66 x .38 x 2 = .5016
.6828 yard²

Answer .6828 square yards

Scoring Notes: The response indicates a thorough understanding of geometry and measurement by forming a correct net (six sections) of a rectangular prism in Part A along with a correct setup for surface area in Part B. The response demonstrates a partial understanding of the mathematical process by providing correct labels on the net in Part A but a calculation error in Part B, which produced an incorrect answer for the surface area. This response receives two points for content and one point for process.

Question 2, Sample C – Geometry and Measurement Score Point 1; Process Score Point 2

The figure shows the dimensions of a piece of foam Rylie would like to use as a pillow. Rylie wants to cover the piece of foam with fabric.

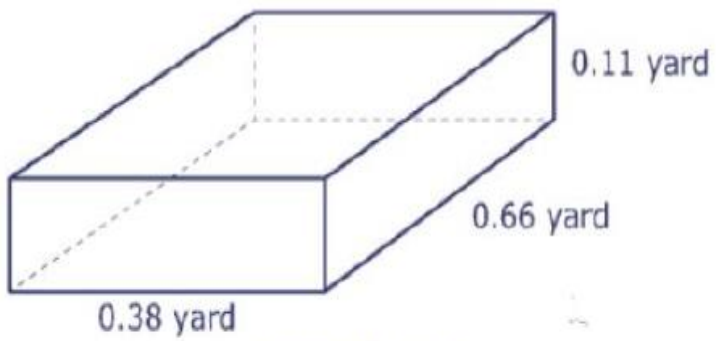

Piece of Foam

Part A

Sketch the net of the piece of foam and label the measurements of the length, width, and height.

Net of Piece of Foam

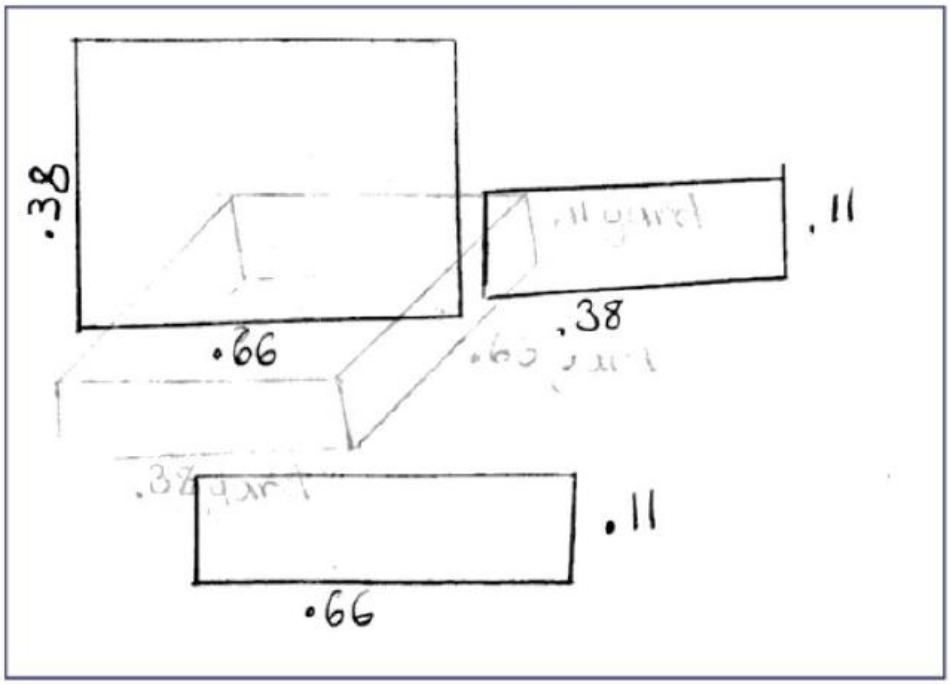

Part B

What is the least amount of fabric, in square yards, needed to cover the entire piece of foam? Do NOT round your answer.

Show All Work

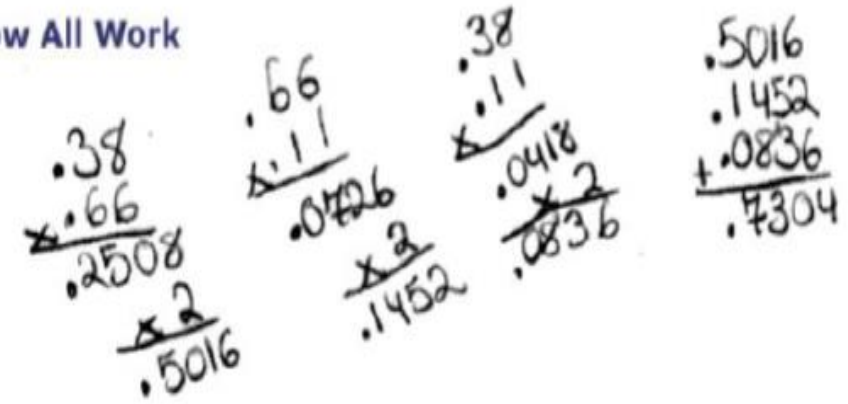

Answer .7304 square yards

Scoring Notes: The response indicates a partial understanding of geometry and measurement by forming an incorrect net of a rectangular prism in Part A but a correct setup for surface area in Part B. The response demonstrates a thorough understanding of the mathematical process by providing correct labels on the net in Part A and a valid calculation of the surface area in Part B. This response receives one point for content and two points for process.

Question 2, Sample D – Geometry and Measurement Score Point 1; Process Score Point 1

The figure shows the dimensions of a piece of foam Rylie would like to use as a pillow. Rylie wants to cover the piece of foam with fabric.

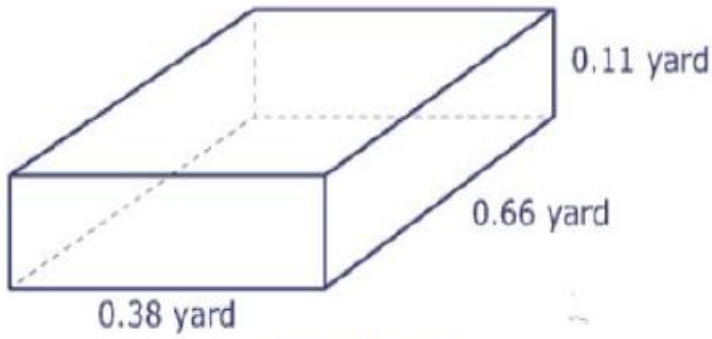

Piece of Foam

Part A

Sketch the net of the piece of foam and label the measurements of the length, width, and height.

Net of Piece of Foam

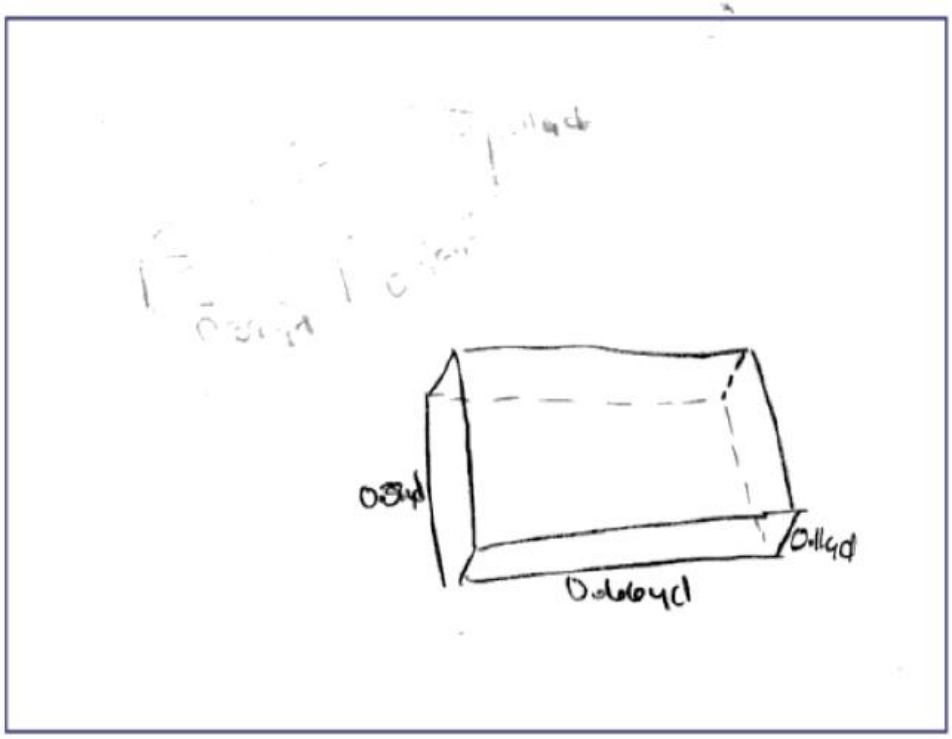

Part B

What is the least amount of fabric, in square yards, needed to cover the entire piece of foam? Do NOT round your answer.

Show All Work

0.1452
+ 0.5016
0.0836
0.7304

0.11
· 0.66
0.0726
· 2
0.1452

0.66
· 0.38
0.2508
· 2
0.5016

0.38
· 0.11
0.0418
· 2
0.0836

Answer 0.7304 square yards

Scoring Notes: The response indicates a partial understanding of geometry and measurement by forming an incorrect net of a rectangular prism in Part A but a correct setup of the surface area in Part B. The response demonstrates a partial understanding of the mathematical process with Part A labeling not receiving credit because it is a copy of the prompt and Part B showing a correct solution for surface area. This response receives one point for content and one point for process.

Question 2, Sample E – Geometry and Measurement Score Point 0; Process Score Point 1

The figure shows the dimensions of a piece of foam Rylie would like to use as a pillow. Rylie wants to cover the piece of foam with fabric.

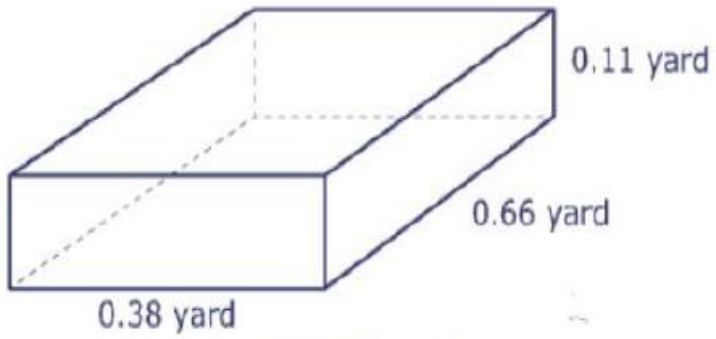

Piece of Foam

Part A

Sketch the net of the piece of foam and label the measurements of the length, width, and height.

Net of Piece of Foam

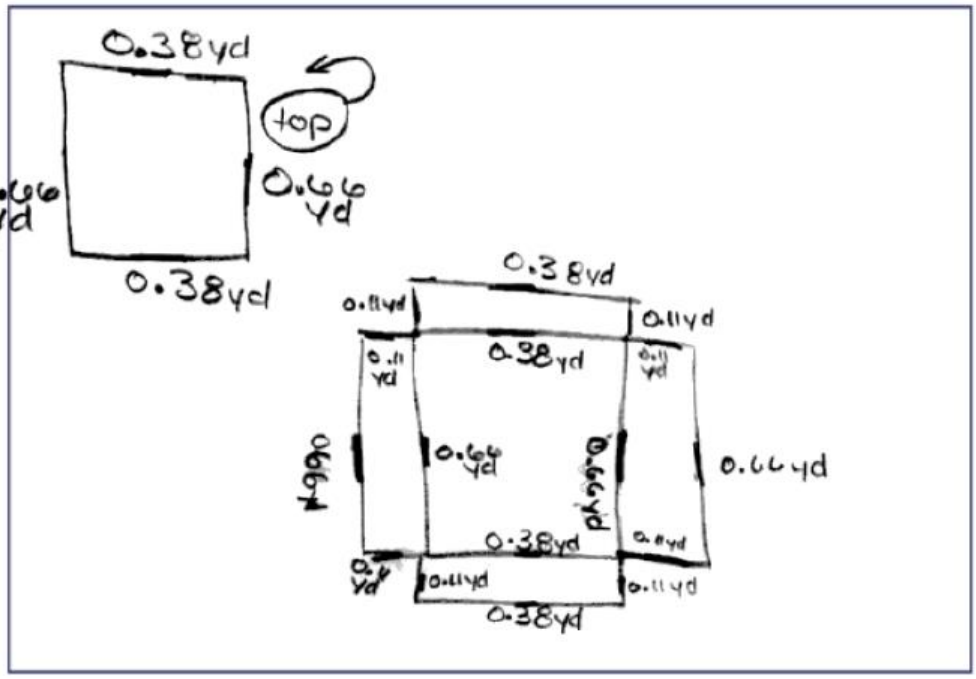

Part B

What is the least amount of fabric, in square yards, needed to cover the entire piece of foam? Do NOT round your answer.

Show All Work

Answer 9 square yards

Scoring Notes: The response indicates a limited understanding of geometry and measurement by forming an incorrect net of a rectangular prism in Part A and not providing a setup to calculate surface area in Part B. The response demonstrates a partial understanding of the mathematical process with correct labeling in Part A but an incorrect solution for the surface area in Part B. This response receives zero points for content and one point for process.

Question 2, Sample F – Geometry and Measurement Score Point 0; Process Score Point 0

The figure shows the dimensions of a piece of foam Rylie would like to use as a pillow. Rylie wants to cover the piece of foam with fabric.

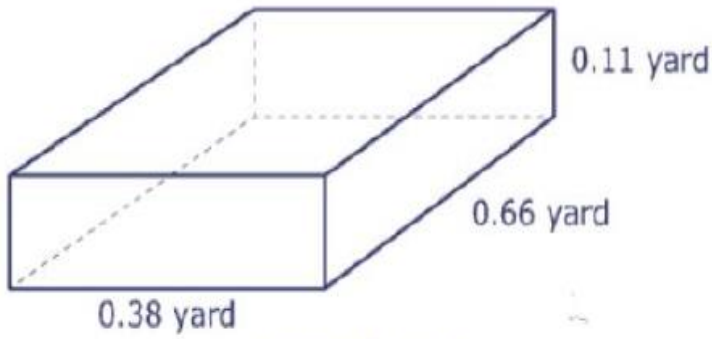

Piece of Foam

Part A

Sketch the net of the piece of foam and label the measurements of the length, width, and height.

Net of Piece of Foam

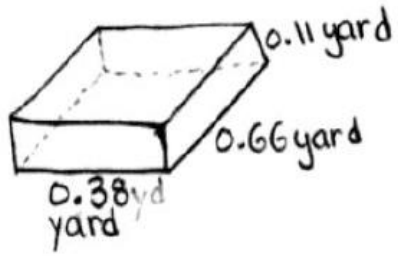

Part B

What is the least amount of fabric, in square yards, needed to cover the entire piece of foam? Do NOT round your answer.

Show All Work

0.11 * 0.66 * 0.38

0.027588

Answer 0.027588 square yards

Scoring Notes: The response indicates a limited understanding of geometry and measurement by forming an incorrect net of a rectangular prism in Part A and an incorrect setup to calculate surface area in Part B. The response indicates a limited understanding of the mathematical process with Part A labeling not receiving credit due to the net being a copy of the prompt and with an incorrect solution for the surface area in Part B. This response receives zero points for content and zero points for process.

Item #3

Constructed-Response

Constructed-Response
Standard 2: Computation
Standard 6: Mathematical Process

Question 3

3. Martha is buying two shirts that cost $18.00 and $33.00 at a local store. She is considering two options to purchase the shirts.

Option A: Use the store sale—buy one shirt and get a second shirt of equal or lesser value free.

Option B: Use a coupon for 40% off the entire purchase; however, the coupon cannot be used with the store sale.

Martha will also pay 7% tax on her purchase.

Which option will cost less money? Be sure to include the total price, including tax, of each option in your answer. Use words, numbers, and/or symbols to justify your answer.

Show All Work

Exemplary Response:

- Sample Process

  In option A, $18 < $33, so if the $18 shirt is free or i.e., costs $0. The pre-tax cost of option A = $33 + $0 = $33. With 7% sales tax, the after-tax cost equals (1.07)($33) = $35.31

  In option B, the pre-discount amount is $18 + $33 = $51. After the 40% discount is applied, the post-discount amount is (1 – 0.4)($51) = (0.6)($51)= $30.60.

  Now, 7% sales tax is applied. The after-tax cost equals (1.07)($30.60) = $32.74.

OR

- Other valid explanation

AND

Option B costs less than Option A (as $32.74 < $35.31).

OR

- Other valid process

Question 3, Sample A – Computation Score Point 2; Process Score Point 2

Martha is buying two shirts that cost $18.00 and $33.00 at a local store. She is considering two options to purchase the shirts.

Option A: Use the store sale—buy one shirt and get a second shirt of equal or lesser value free.

Option B: Use a coupon for 40% off the entire purchase; however, the coupon cannot be used with the store sale.

Martha will also pay 7% tax on her purchase.

Which option will cost less money? Be sure to include the total price, including tax, of each option in your answer. Use words, numbers, and/or symbols to justify your answer.

Show All Work

Option A

33.00
+ 2.31 tax
35.31

option B

33
+ 18
51

51
x.40
20.40

51 tot
− 20.40
30.60

30.60
+ 2.14
32.74

Option B would be less because the coupon takes 20 dollars of of the 51.

Scoring Notes: The response indicates a thorough understanding of discounts and tax in computation given the correct calculations for options A and B. The response demonstrates a thorough understanding of the mathematical process by correctly stating option B costs less than option A. This response receives two points for content and two points for process.

Question 3, Sample B – Computation Score Point 1; Process Score Point 2

Martha is buying two shirts that cost $18.00 and $33.00 at a local store. She is considering two options to purchase the shirts.

Option A: Use the store sale—buy one shirt and get a second shirt of equal or lesser value free.

Option B: Use a coupon for 40% off the entire purchase; however, the coupon cannot be used with the store sale.

Martha will also pay 7% tax on her purchase.

Which option will cost less money? Be sure to include the total price, including tax, of each option in your answer. Use words, numbers, and/or symbols to justify your answer.

Show All Work

A $33 + $18 − $18 = $33 $33 × .7 = 23.1 33 − 23.1 = 9.9 Sales Tax $ $33 + $9.90 = $42.90

B 18 + 33 = 51 51 × 40% 51 × .4 = $20.40 $20.40 × .7 = 14.28 $20.40 + $14.28 = $34.68

Option B will cost less money because A is $42.90 and B is $34.68. So, $42.90 > $34.68.

Scoring Notes: The response indicates a limited understanding of discounts and tax in computation as an incorrect tax amount is applied to the discount itself and not to the amount after the discount is subtracted. Given the calculations which are made, the response demonstrates a thorough understanding of the mathematical process by correctly stating option B costs less than option A. This response receives one point for content and two points for process.

Question 3, Sample C – Computation Score Point 1; Process Score Point 1

Martha is buying two shirts that cost $18.00 and $33.00 at a local store. She is considering two options to purchase the shirts.

Option A: Use the store sale—buy one shirt and get a second shirt of equal or lesser value free.

Option B: Use a coupon for 40% off the entire purchase; however, the coupon cannot be used with the store sale.

Martha will also pay 7% tax on her purchase.

Which option will cost less money? Be sure to include the total price, including tax, of each option in your answer. Use words, numbers, and/or symbols to justify your answer.

Show All Work

$33.00
+ 7% tax
$35.31

$33.00
+ 18.00
$51.00

$51.00
− 40% off
$30.60

Useing ther coupon would be cheaper because you are taking away more money.

Scoring Notes: The response indicates a partial understanding of discounts and tax in computation given the correct calculations for option B and a correct pre-tax calculation for option A. There is not a sales tax calculation included for option A. The response demonstrates a partial understanding of the mathematical process by correctly stating option B costs less than option A but provides an insufficient justification of taking away more money. The option with the larger discount could still cost more. The comparative end prices are what matters. This response receives one point for content and one point for process.

Question 3, Sample D – Computation Score Point 1; Process Score Point 0

Martha is buying two shirts that cost $18.00 and $33.00 at a local store. She is considering two options to purchase the shirts.

Option A: Use the store sale—buy one shirt and get a second shirt of equal or lesser value free.

Option B: Use a coupon for 40% off the entire purchase; however, the coupon cannot be used with the store sale.

Martha will also pay 7% tax on her purchase.

Which option will cost less money? Be sure to include the total price, including tax, of each option in your answer. Use words, numbers, and/or symbols to justify your answer.

Show All Work

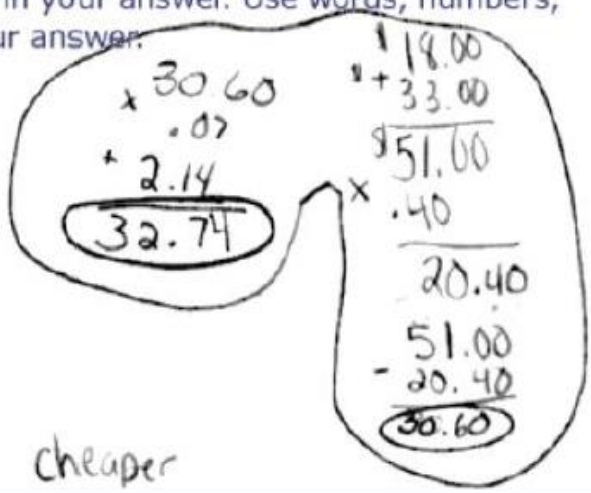

Option B is cheaper because it comes off the entire purchase.

Scoring Notes: The response indicates a partial understanding of discounts and tax in computation given the correct calculations for option B. However, no calculations are made regarding option A. The response demonstrates no understanding of the mathematical process as no true comparison can be made because no calculations are provided for option A. This response receives one point for content and zero points for process.

Question 3, Sample E – Computation Score Point 0; Process Score Point 1

Martha is buying two shirts that cost $18.00 and $33.00 at a local store. She is considering two options to purchase the shirts.

Option A: Use the store sale—buy one shirt and get a second shirt of equal or lesser value free.

Option B: Use a coupon for 40% off the entire purchase; however, the coupon cannot be used with the store sale.

Martha will also pay 7% tax on her purchase.

Which option will cost less money? Be sure to include the total price, including tax, of each option in your answer. Use words, numbers, and/or symbols to justify your answer.

Total prices

Show All Work

option A 1 Shirt = 18$ + 1 Shirt = 19.26$

Option B 1 Shirt = 18$ + 1 Shirt 18$ - 40% = 28.8

1x + 1x = 19.26 = 19.26

1x + 1x • .4 = 25.80

option a will be cheaper only costing 19.26$ while option b = 28.8$

Scoring Notes: The response indicates little to no understanding of discounts and tax in computation with the sales tax applied to option A for just the cheaper shirt and the discount applied to option B on just one shirt after double counting the cheaper shirt. The response demonstrates partial understanding of the mathematical process as the correct option is selected based upon the calculations made. The option selected, however, is an incorrect answer based upon a correctly completed calculations. This response receives zero points for content and one point for process.

Question 3, Sample F – Computation Score Point 0; Process Score Point 0

Martha is buying two shirts that cost $18.00 and $33.00 at a local store. She is considering two options to purchase the shirts.

Option A: Use the store sale—buy one shirt and get a second shirt of equal or lesser value free.

Option B: Use a coupon for 40% off the entire purchase; however, the coupon cannot be used with the store sale.

Martha will also pay 7% tax on her purchase.

Which option will cost less money? Be sure to include the total price, including tax, of each option in your answer. Use words, numbers, and/or symbols to justify your answer.

Show All Work

18 option A

18
+18
36

36
+18
54

~~40/100 = 54~~ option B

~~100 × 54/40 =~~

33
-18
15

54/40 × 100 = 121.6

Option B, because store sale doesn't say how much they are taking off, so if it is equal price, it is $36

Scoring Notes: The response demonstrates no understanding of discounts and tax in computation with incorrect starting work numbers for both options A and B, with sales tax not applied, and an invalid setup for calculating the discount. The response demonstrates no understanding of the mathematical process as the justification for the options selected is not sound. This response receives zero points for content and zero points for process.

Item #4

Extended-Response

Extended-Response
Standard 3: Algebra and Functions
Standard 6: Mathematical Process

Question 4

4. A truck rental company charges a flat fee of $25.00 to rent a truck and an additional $0.50 for each mile the truck is driven. There is no sales tax.

Part A

Sue rented a truck from the company and was charged $82.50 when she returned the truck.

Write an equation that can be used to determine the number of miles Sue drove the truck.

Equation _____

Part B

On the lines provided, define what the variable in your equation represents.

_____

_____

Part C

Sue pays for the gas used by the truck. The truck travels 8 miles per gallon of gas. Sue pays $3.50 per gallon of gas, including sales tax.

How much, in dollars, does Sue pay for the gas?

Show All Work

Answer $ _____

Exemplary Response:

- In Part A, a valid equation is: $82.50 = $25.00 + ($0.50)(m)

OR

- Other valid explanation

- In Part B, let m = the number of miles the rental truck is driven by Sue

OR

- Other valid explanation

AND

- Sample Process:

  In Part C, first solve the equation in Part A:

  $82.50 - $25.00 = ($0.50)(m)
  $57.50 = ($0.50)(m)
  m = $57.50/$0.50
  m = 115 miles driven

  115 miles/(8 miles/gallon) = 14.375 gallons

  14.375 gallons * ($3.50/gallon) = $50.3125 for gas
  $50.31 for gas (rounded)

OR

- Other valid process

Question 4, Sample A – Algebra and Functions Score Point 3; Process Score Point 3

A truck rental company charges a flat fee of $25.00 to rent a truck and an additional $0.50 for each mile the truck is driven. There is no sales tax.

Part A

Sue rented a truck from the company and was charged $82.50 when she returned the truck.

Write an equation that can be used to determine the number of miles Sue drove the truck.

Equation $25.00 + 0.50m = 82.50$

Part B

On the lines provided, define what the variable in your equation represents.

The variable is m, which represents how many miles sue drove.

Part C

Sue pays for the gas used by the truck. The truck travels 8 miles per gallon of gas. Sue pays $3.50 per gallon of gas, including sales tax.

How much, in dollars, does Sue pay for the gas?

Show All Work

$25 + .5m = 82.50$
$-25 \qquad -25$
$\frac{.5m}{.5} = \frac{57.5}{.5}$
$m = 115$

$\frac{115}{8} = 14.375$
$\cdot 3.50$
$\$50.3125 \approx$
50.31

Answer $ 50.31

Scoring Notes: The response indicates a thorough understanding of how to solve linear equations in algebra and functions with a correct equation provided in Part A and the number of miles driven determined correctly in Part C. The response indicates a thorough understanding of the mathematical process related to the task by providing a valid variable definition in Part B and correct steps to calculate the gas cost and proper rounding applied in Part C. This response receives three points for content and three points for process.

Question 4, Sample B – Algebra and Functions Score Point 3; Process Score Point 2

A truck rental company charges a flat fee of $25.00 to rent a truck and an additional $0.50 for each mile the truck is driven. There is no sales tax.

Part A

Sue rented a truck from the company and was charged $82.50 when she returned the truck.

Write an equation that can be used to determine the number of miles Sue drove the truck.

Equation $25 + .50m = 82.50$

Part B

On the lines provided, define what the variable in your equation represents.

The variable in my equation represents the number of miles Sue drove the truck.

Part C

Sue pays for the gas used by the truck. The truck travels 8 miles per gallon of gas. Sue pays $3.50 per gallon of gas, including sales tax.

How much, in dollars, does Sue pay for the gas?

Show All Work

$25 + .50m = 82.50$
$-25 \quad -25$
$.50m = 57.50$
$\frac{.50m}{.50} = 115$

$\frac{115}{8} = 14.4$

$3.50 \times 14.4 = 50.4$

Answer $ 50.40

Scoring Notes: The response indicates a thorough understanding of how to solve linear equations in algebra and functions with a correct equation provided in Part A and the number of miles driven determined correctly in Part C. The response indicates a partial understanding of the mathematical process related to the task by providing a valid variable definition in Part B and, initially, correct steps to calculate the gas cost in Part C. However, improper rounding is applied in determining the number of gallons, which, in turn, yields a slightly incorrect answer for the amount paid for gas. This response receives three points for content and two points for process.

Question 4, Sample C – Algebra and Functions Score Point 2; Process Score Point 3

A truck rental company charges a flat fee of $25.00 to rent a truck and an additional $0.50 for each mile the truck is driven. There is no sales tax.

Part A

Sue rented a truck from the company and was charged $82.50 when she returned the truck.

Write an equation that can be used to determine the number of miles Sue drove the truck.

Equation $.5m + 25 = 82.50$

Part B

On the lines provided, define what the variable in your equation represents.

m = miles ← how many miles she drove

Part C

Sue pays for the gas used by the truck. The truck travels 8 miles per gallon of gas. Sue pays $3.50 per gallon of gas, including sales tax.

How much, in dollars, does Sue pay for the gas?

Show All Work

$\frac{.5m}{.5} + \frac{25}{.5}$

m = 50

6.25 × 3.50 = 21.875

6.25 × 3.50

Answer $ 21.88

Scoring Notes: The response indicates a partial understanding of how to solve linear equations in algebra and functions with a correct equation provided in Part A but an incorrect number of miles driven determined in Part C. The response indicates a thorough understanding of the mathematical process related to the task by providing a valid variable definition in Part B and a correct amount paid for gas determined based upon an incorrect number of miles driven due to a calculation error. This response receives two points for content and three points for process.

Question 4, Sample D – Algebra and Functions Score Point 2; Process Score Point 1

A truck rental company charges a flat fee of $25.00 to rent a truck and an additional $0.50 for each mile the truck is driven. There is no sales tax.

Part A

Sue rented a truck from the company and was charged $82.50 when she returned the truck.

Write an equation that can be used to determine the number of miles Sue drove the truck.

Equation 82.50=25+.50m

Part B

On the lines provided, define what the variable in your equation represents.

The variable m represents every mile that costed Sue

Part C

Sue pays for the gas used by the truck. The truck travels 8 miles per gallon of gas. Sue pays $3.50 per gallon of gas, including sales tax.

How much, in dollars, does Sue pay for the gas?

Show All Work

X= 8(3.60)
X=28.00

4 8
x 3.50
28.00

Answer $ 28.00

Scoring Notes: The response indicates a partial understanding of how to solve linear equations in algebra and functions with a correct equation provided in Part A but the number of miles driven not calculated at all in Part C. The response indicates a limited understanding of the mathematical process related to the task by providing a valid variable definition in Part B but an incorrect calculation for the amount paid for gas in Part C. This response receives two points for content and one point for process.

Question 4, Sample E – Algebra and Functions Score Point 1; Process Score Point 3

A truck rental company charges a flat fee of $25.00 to rent a truck and an additional $0.50 for each mile the truck is driven. There is no sales tax.

Part A

Sue rented a truck from the company and was charged $82.50 when she returned the truck.

Write an equation that can be used to determine the number of miles Sue drove the truck.

Equation $25.00 / $0.50m = 82.50

Part B

On the lines provided, define what the variable in your equation represents.

M equals miles Sue drove on the truck.

Part C

Sue pays for the gas used by the truck. The truck travels 8 miles per gallon of gas. Sue pays $3.50 per gallon of gas, including sales tax.

How much, in dollars, does Sue pay for the gas?

Show All Work

$82.50
-$25.00
57.50

57.50 / 0.50 = 115

115/8 = 14.375 · 3.50

Answer $ 50.31

Scoring Notes: The response indicates a limited understanding of how to solve linear equations in algebra and functions with an incorrect equation provided in Part A but the correct number of miles driven determined in Part C. The response indicates a thorough understanding of the mathematical process related to the task by providing a valid variable definition in Part B and correct steps to calculate the gas cost and proper rounding applied in Part C. This response receives one point for content and three points for process.

Question 4, Sample F – Algebra and Functions Score Point 1; Process Score Point 1

A truck rental company charges a flat fee of $25.00 to rent a truck and an additional $0.50 for each mile the truck is driven. There is no sales tax.

Part A

Sue rented a truck from the company and was charged $82.50 when she returned the truck.

Write an equation that can be used to determine the number of miles Sue drove the truck.

Equation 82.50 − 50 = R = 57.5 .50 ⟌57.5 = 115

Part B

On the lines provided, define what the variable in your equation represents.

My variable is R = rental cost.

Part C

Sue pays for the gas used by the truck. The truck travels 8 miles per gallon of gas. Sue pays $3.50 per gallon of gas, including sales tax.

How much, in dollars, does Sue pay for the gas?

Show All Work 14.375 ⟌115 14.375 × 3.50 50.3125

Answer $ 51

Scoring Notes: The response indicates a limited understanding of how to solve linear equations in algebra and functions with an incorrect equation provided in Part A but the correct number of miles driven determined in Part C. The response indicates a limited understanding of the mathematical process related to the task by providing an invalid variable definition in Part B but correct steps to calculate the gas cost in Part C; however, proper rounding is not applied in Part C. This response receives one point for content and one point for process.

Question 4, Sample G – Algebra and Functions Score Point 0; Process Score Point 1

A truck rental company charges a flat fee of $25.00 to rent a truck and an additional $0.50 for each mile the truck is driven. There is no sales tax.

Part A

Sue rented a truck from the company and was charged $82.50 when she returned the truck.

Write an equation that can be used to determine the number of miles Sue drove the truck.

Equation 8250 = .50x

Part B

On the lines provided, define what the variable in your equation represents.

How many miles Sue traveled.

Part C

Sue pays for the gas used by the truck. The truck travels 8 miles per gallon of gas. Sue pays $3.50 per gallon of gas, including sales tax.

How much, in dollars, does Sue pay for the gas?

Show All Work

350 | 800

350 | 800 (2.28)

0

Answer $ 2.28

Scoring Notes: The response indicates no understanding of how to solve linear equations in algebra and functions with as an incorrect equation provided in Part A and the miles driven not determined in Part C. The response indicates a limited understanding of the mathematical process by providing a valid variable definition in Part B. However, no correct steps are taken to calculate the gas cost in Part C. This response receives zero points for content and one point for process.

Question 4, Sample H – Algebra and Functions Score Point 0; Process Score Point 0

A truck rental company charges a flat fee of $25.00 to rent a truck and an additional $0.50 for each mile the truck is driven. There is no sales tax.

Part A

Sue rented a truck from the company and was charged $82.50 when she returned the truck.

Write an equation that can be used to determine the number of miles Sue drove the truck.

Equation 82.50 ÷ 0.50 = 165 miles

Part B

On the lines provided, define what the variable in your equation represents.

The varrable represents how many miles Sue drove that day.

Part C

Sue pays for the gas used by the truck. The truck travels 8 miles per gallon of gas. Sue pays $3.50 per gallon of gas, including sales tax.

How much, in dollars, does Sue pay for the gas?

Show All Work

$3.50
× 8m
28.00

Answer $ 28.00

Scoring Notes: The response indicates no understanding of how to solve linear equations in algebra and functions with an incorrect equation provided in Part A and the miles driven not determined in Part C. The response indicates no understanding of the mathematical process with no valid variable definition in Part B and with no correct steps to calculate the gas cost in Part C. This response receives zero points for content and zero points for process.